Chapter 8

Manipulator-mechanism Design

Overview

In this chapter the following topics will be covered:

- Task-Based Design Requirements
  - Matching degrees of freedom to task needs
  - Impact of symmetric tools and workspace considerations
- Kinematic Configuration
  - Joint configurations: Cartesian, articulated, SCARA, spherical, cylindrical
  - Design of wrist mechanisms with orthogonal and nonorthogonal axes
- Quantitative Measures of Workspace Attributes
  - Efficiency of workspace design using structural length index Q_L
  - Well-conditioned workspaces and manipulability measure w
- Redundant and Closed-Chain Structures
  - Applications and advantages of redundant manipulators
  - Closed-loop structures like the Stewart mechanism

Introduction

Influence on Kinematic and Dynamic Analysis: The structure of a manipulator affects both kinematic and dynamic analysis. Some configurations are easy to solve, while others lack closed-form solutions.

Performance Limitations: Factors such as load capacity, speed, size of workspace, and repeatability limit a manipulator's performance.

Rigid-Body Dynamics: Control of manipulators also depends on friction and flexibility of drive systems.

Elements of a Robot System:

1. The manipulator, including internal or proprioceptive sensors.
2. The end-effector, or end-of-arm tooling.
3. External sensors and effectors, such as vision systems and part feeders.
4. The controller.

Iterative Process: Designing a manipulator involves rethinking higher-level design decisions as new problems arise.

Basing the Design on Task Requirements

Universally Programmable: Robots are designed to perform a variety of tasks but are often specialized for specific applications.

Degrees of Freedom (DOF): The number of DOF should match the number required by the task. Not all tasks require a full six DOF.

Example: Let a manipulator position a grinding tool in two different configurations. In this scenario, the orientation of the tool relative to its axis, $\hat{Z}_T$, is irrelevant because the grinding wheel rotates at several hundred RPM. Since the tool can be positioned in an infinite number of ways by rotating around $\hat{Z}_T$, the robot is considered **redundant** for this task.

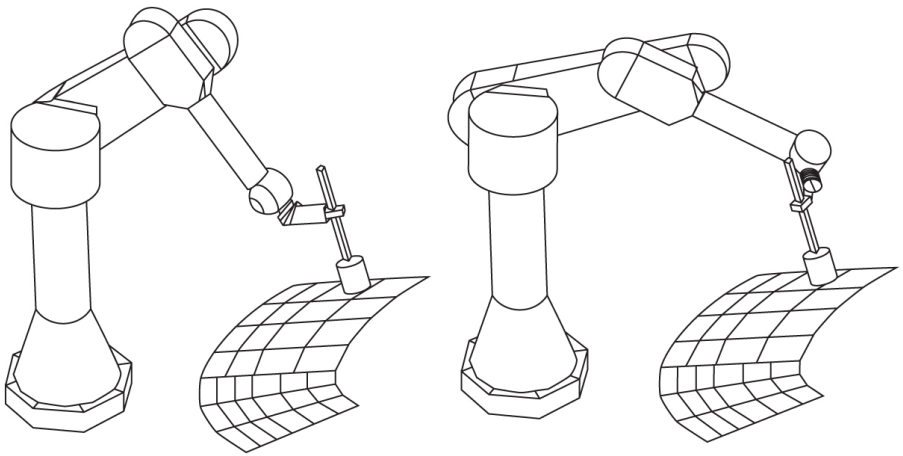

Symmetric tools may reduce required DOF. Arc welding, spot welding, deburring, glueing, and polishing often employ end-effectors with at least one axis of symmetry.

Basing the Design on Task Requirements

Symmetric-Tool Handling

- Imagining an extra "fictitious" joint along the tool's axis of symmetry can simplify positioning.
- Normally requires six degrees of freedom, but with the fictitious joint, only five real joints are needed.
- Many industrial robots have five degrees of freedom (5-DOF) due to the prevalence of symmetric tools.

Tasks with Fewer than Six Degrees of Freedom

- ***Example***: Placing components on circuit boards requires three degrees of freedom for planar movement (x, y, rotation) and a fourth for lifting/inserting parts (z).

Basing the Design on Task Requirements

Active Positioning Devices

Devices like tilt/roll platforms reduce the robot's required degrees of freedom.

Example: Welding pipes with a tilt/roll platform accounts for two degrees of freedom, theoretically allowing a 3-DOF robot for symmetric-tool tasks.

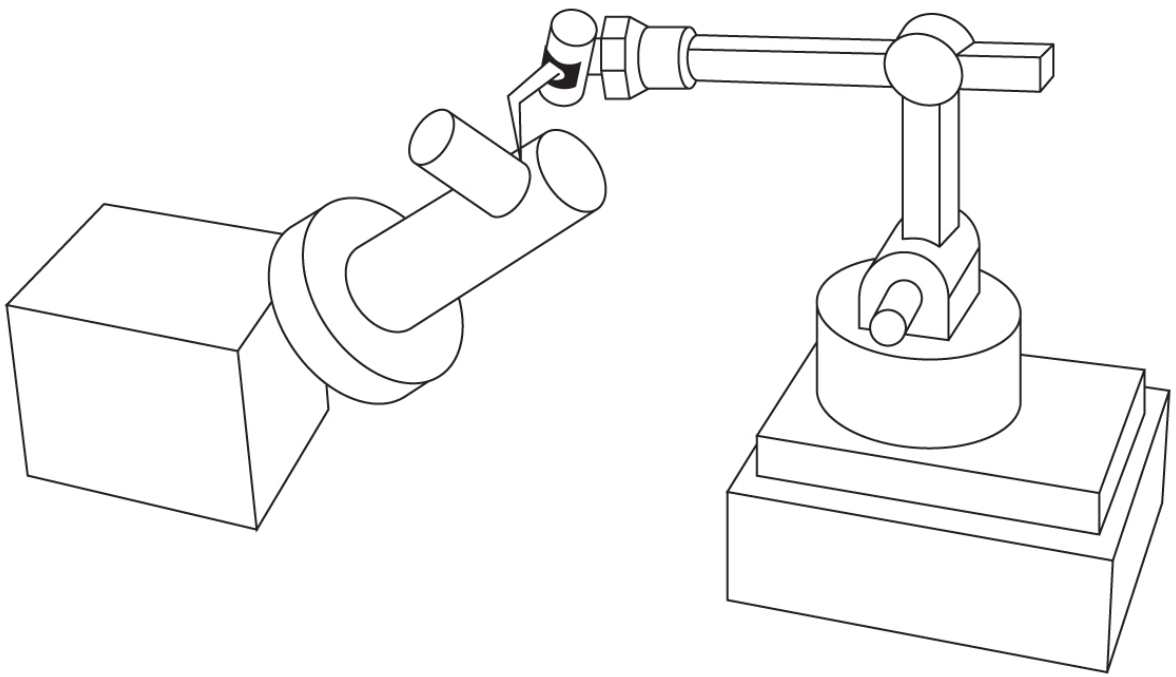

A tilt/roll platform provides two degrees of freedom to the overall manipulator system.

Basing the Design on Task Requirements

Load capacity

The load capacity of a manipulator depends upon the sizing of its structural members, power-transmission system, and actuators.

The load placed on actuators and drive system is a function of the configuration of the robot, the percentage of time supporting a load, and dynamic loading due to inertial- and velocity-related forces.

Speed

An obvious goal in design has been for faster and faster manipulators.

High speed offers advantages in many applications when a proposed robotic solution must compete on economic terms with hard automation or human workers. For some applications, however, the process itself limits the speed rather than the manipulator. This is the case with many welding and spray-painting applications.

NOTE: the acceleration and deceleration phases take up most of the cycle time (for example in a pick-and-place scenario). Hence, acceleration capability, not just peak speed, is very important.

Load capacity

The load capacity of a manipulator depends upon the sizing of its structural members, power-transmission system, and actuators.

The load placed on actuators and drive system is a function of the configuration of the robot, the percentage of time supporting a load, and dynamic loading due to inertial- and velocity-related forces.

Speed

An obvious goal in design has been for faster and faster manipulators.

High speed offers advantages in many applications when a proposed robotic solution must compete on economic terms with hard automation or human workers. For some applications, however, the process itself limits the speed rather than the manipulator. This is the case with many welding and spray-painting applications.

NOTE: the acceleration and deceleration phases take up most of the cycle time (for example in a pick-and-place scenario). Hence, acceleration capability, not just peak speed, is very important.

Basing the Design on Task Requirements

Most manipulators are designed so that the last $n-3$ joints orient the end-effector and have axes that intersect at the **wrist point**, and the first three joints position this wrist point. Manipulators with this design could be said to be composed of a **positioning structure** followed by an **orienting structure** or wrist.

Basing the Design on Task Requirements

Cartesian manipulator

Joints 1 through 3 are prismatic, mutually orthogonal, and correspond to the X, Y, and Z Cartesian directions. The inverse kinematic solution for this configuration is trivial.

- This configuration produces robots with very stiff structures. As a consequence, very large robots can be built. These large robots, often called **gantry robots,** sometimes manipulate entire automobiles or inspect entire aircraft.

- The first three joints are decoupled. This makes them simpler to design and prevents kinematic singularities due to the first three joints.

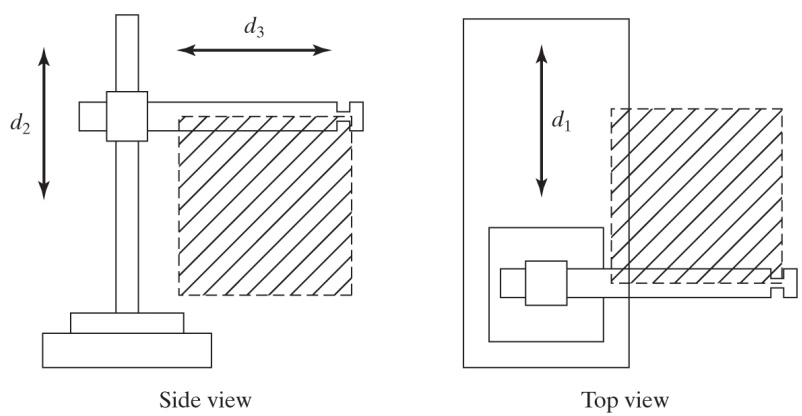

A Cartesian manipulator.

Basing the Design on Task Requirements

Articulated manipulator

Sometimes also called a **jointed**, **elbow**, or **anthropomorphic** manipulator, typically consists of two "shoulder" joints (one for rotation about a vertical axis and one for elevation out of the horizontal plane), an "elbow" joint (whose axis is usually parallel to the shoulder elevation joint), and two or three wrist joints at the end of the manipulator.

- Articulated robots minimize the intrusion of the manipulator structure into the workspace, making them capable of reaching into confined spaces.

- They require much less overall structure than Cartesian robots, making them less expensive for applications needing smaller workspaces.

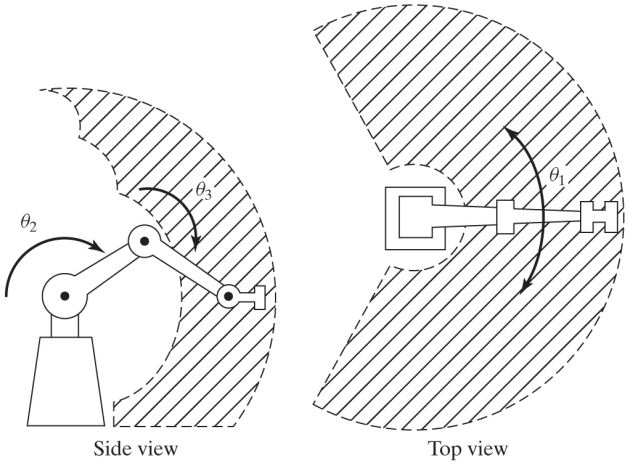

An articulated manipulator.

Basing the Design on Task Requirements

SCARA manipulator

It has three parallel revolute joints (allowing it to move and orient in a plane), with a fourth prismatic joint for moving the end-effector normal to the plane.

- The first three joints do not have to support any of the weight of the manipulator or the load.

- Link 0 can easily house the actuators for the first two joints. The actuators can be made very large, so the robot can move very fast. One SCARA manipulator can move at up to 30 feet per second, about 10 times faster than most articulated industrial robots

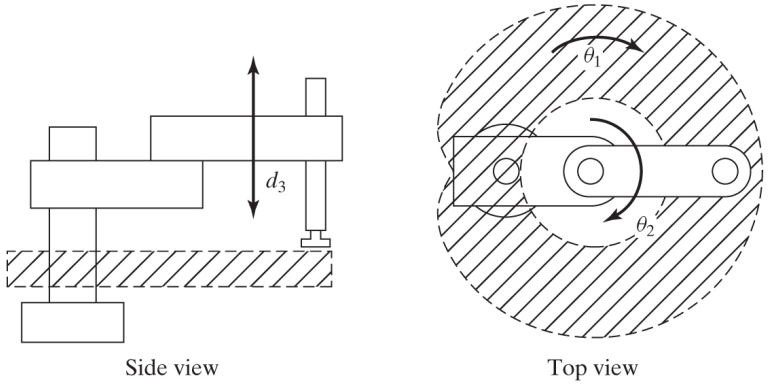

A SCARA manipulator.

Basing the Design on Task Requirements

Spherical manipulator

It has many similarities to the articulated manipulator, but with the elbow joint replaced by a prismatic joint. This design is better suited to some applications than is the elbow design. The link that moves prismatically might telescope –
or even "stick out the back" when retracted.

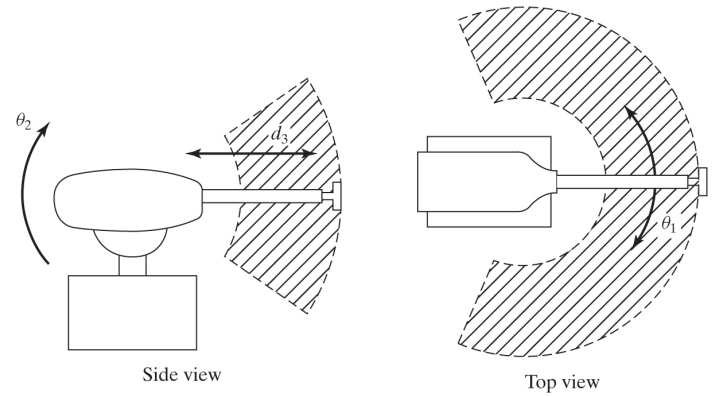

A spherical manipulator.

Cylindrical manipulator

Consists of a prismatic joint for translating the arm vertically, a revolute joint with a vertical axis, another prismatic joint orthogonal to the revolute joint axis, and, finally, a wrist of some sort.

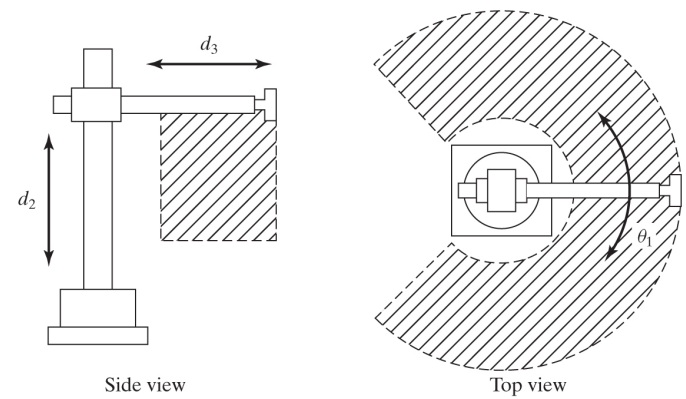

A cylindrical manipulator.

Quantitative Measures of Workspace Attributes

Efficiency of design in terms of generating workspace

The **length sum** of a manipulator gives a rough measure of the "length" of the complete linkage. Let the length sum of a manipulator be defined as

$$L = \sum_{i=1}^{N} (a_{i-1} + d_i)$$

where a_{i-1} and d_i are the link length and joint offset as defined in Chapter 3.

NOTE: for prismatic joints,d_i must here be interpreted as a constant equal to the length of travel between the joint-travel limits.

The **structural length index**, Q_L, is defined as the ratio of the manipulator's length sum to the cube root of the workspace volume - that is,

$$Q_L = \frac{L}{\sqrt[3]{w}}$$

where w is the volume of the manipulator's workspace.

NOTE: Good designs have low Q_L.

Quantitative Measures of Workspace Attributes

Optimal Value for Cartesian Manipulator: the value of Q_L is minimized when all three joints have the same length of travel.
This minimal value is $Q_L = 3$.

Optimal Value for articulated Manipulator: $Q_L = \frac{1}{\sqrt[3]{4\pi/3}} \cong 0.62$

Example: A SCARA manipulator has links 1 and 2 of equal length $l/2$, and the range of motion of the prismatic joint 3 is given by d_3. Assume for simplicity that the joint limits are absent, and find Q_L. What value of d_3 minimizes Q_L and what is this minimal value?

- The length sum is: $L = \frac{l}{2} + \frac{l}{2} + d_3 = l + d_3$
- The workspace volume: is a right cylinder of radius l and height d_3. Therefore:

$$Q_L = \frac{l + d_3}{\sqrt[3]{\pi l^2 d_3}}$$

- Minimize Q_L as a function of the ratio $\frac{d_3}{l}$ gives $d_3 = \frac{l}{2}$ as optimal.
- The corresponding minimal value of Q_L is 1.29.

Quantitative Measures of Workspace Attributes

Designing well-conditioned workspaces

Singular Points:

- A manipulator loses one or more degrees of freedom at singular points.
- Certain tasks may not be performed effectively at these points.

Neighborhood of Singular Points:

- Actions of the manipulator near singular points may be poorly conditioned.
- The manipulator's ability to move and apply forces uniformly is compromised.

Distance from Singularities:

- The farther the manipulator is from singular points, the better it can move uniformly and apply forces in all directions.

Designing well-conditioned workspaces – cont'd

Quantifying Effects:

- Various measures have been suggested to quantify the effects of singularities. These measures can help design a manipulator with a maximally large, well-conditioned subspace of the workspace.
- Measures like manipulability and inertia ellipsoids help evaluate workspace conditioning.

Design Time Considerations:

- Using these measures during design can improve the manipulator's overall performance by avoiding poorly conditioned regions.

Designing well-conditioned workspaces – cont'd

Singular configurations:
To find singular points,

$$\det\big(\boldsymbol{J}(\Theta)\big) = 0$$

Manipulability measure: a measure of manipulator dexterity is defined as:

$$w = \sqrt{\det\big(\boldsymbol{J}(\Theta)\boldsymbol{J}^{\top}(\Theta)\big)}$$

which, for nonredundant manipulators, reduces to

$$w = \left|\det\big(\boldsymbol{J}(\Theta)\big)\right|$$

NOTE: A good manipulator design has large areas of its workspace characterized by high values of w.

Quantitative Measures of Workspace Attributes

Manipulability measures based on acceleration analysis or force-application capability – Asada's approach:

This approach suggests to examine the eigenvalues of the Cartesian mass matrix

$$\boldsymbol{M}_x(\Theta) = \boldsymbol{J}^{-\top}(\Theta)\boldsymbol{M}(\Theta)\boldsymbol{J}^{-\mathbf{1}}(\Theta)$$

As a measure of how well the manipulator can accelerate in various Cartesian directions.

A graphic representation of this measure, known as **inertia ellipsoid**, is given by:

$$\boldsymbol{X}^\top \boldsymbol{M}_x(\Theta)\boldsymbol{X} = \mathbf{1},$$

- The above equation represents an n-dimensional ellipse, where n is the dimension of $\boldsymbol{X}$.
- The axes of the ellipsoid lie in the directions of the eigenvectors of $\boldsymbol{M}_x(\Theta)$.
- The reciprocals of square roots of the corresponding eigenvalues provide the length of the axes of the ellipsoids.

NOTE: Well-conditioned points in the manipulator workspace are characterized by inertia ellipsoids that are spherical (or nearly so).

Quantitative Measures of Workspace Attributes

Manipulability measures based on acceleration analysis or force-application capability – Asada's approach:

Example: Consider a planar two-link RR manipulator. The inertia ellipsoid can be found as

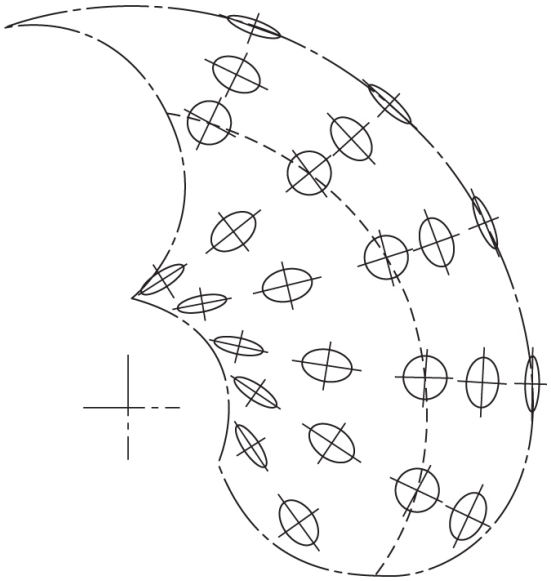

Workspace of a 2-DOF planar arm, showing inertia ellipsoids [1]. Workspace of a 2-DOF planar arm, showing inertia ellipsoids, adapted from

[1] Asada, Haruhiko. "Dynamic analysis and design of robot manipulators using inertia ellipsoids." Proceedings. 1984 IEEE International Conference on Robotics and Automation. Vol. 1. IEEE, 1984.

Redundant and Closed-Chain Structures

Redundant manipulators have more than six degrees of freedom and offer benefits like micromanipulation and avoiding singular configurations (Additional joints can also help a mechanism avoid singular configurations.)

Closed-loop structures:

- **Stewart Mechanism**: A closed-loop alternative to the serial 6-DOF manipulator that controls the position and orientation of the end-effector using six linear actuators.
- **Actuator Connections**: Actuators are connected to the base with two-degree-of-freedom universal joints and to the end-effector with three-degree-of-freedom ball-and-socket joints.
- **Characteristics**: The mechanism is very stiff due to its closed-loop structure but has a more limited range of motion compared to serial linkages.
- **Kinematic Solutions**: The inverse kinematic solution for the Stewart mechanism is simple, whereas the forward kinematic solution is complex and often lacks a closed-form formulation.

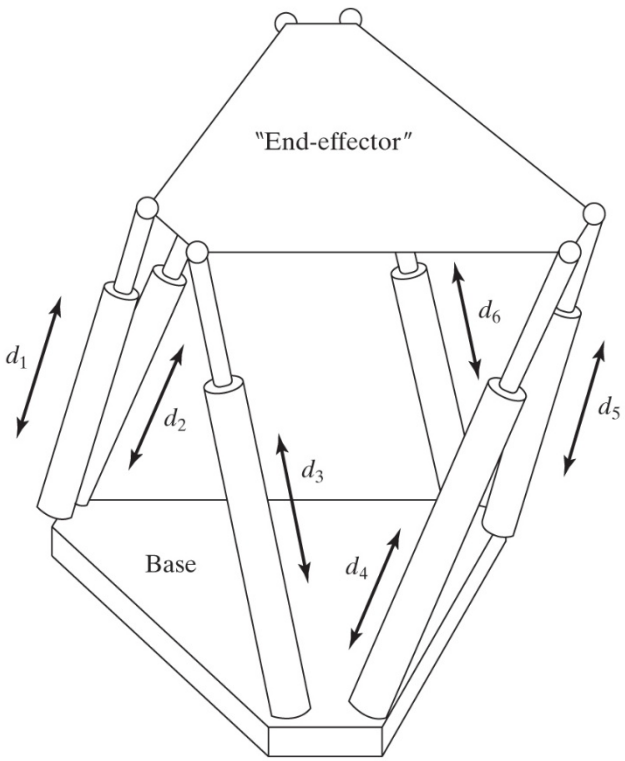

Let The Learning Continue